NO.	REVISIONS	DATE	DEVISER
1.			
2.			
3.			

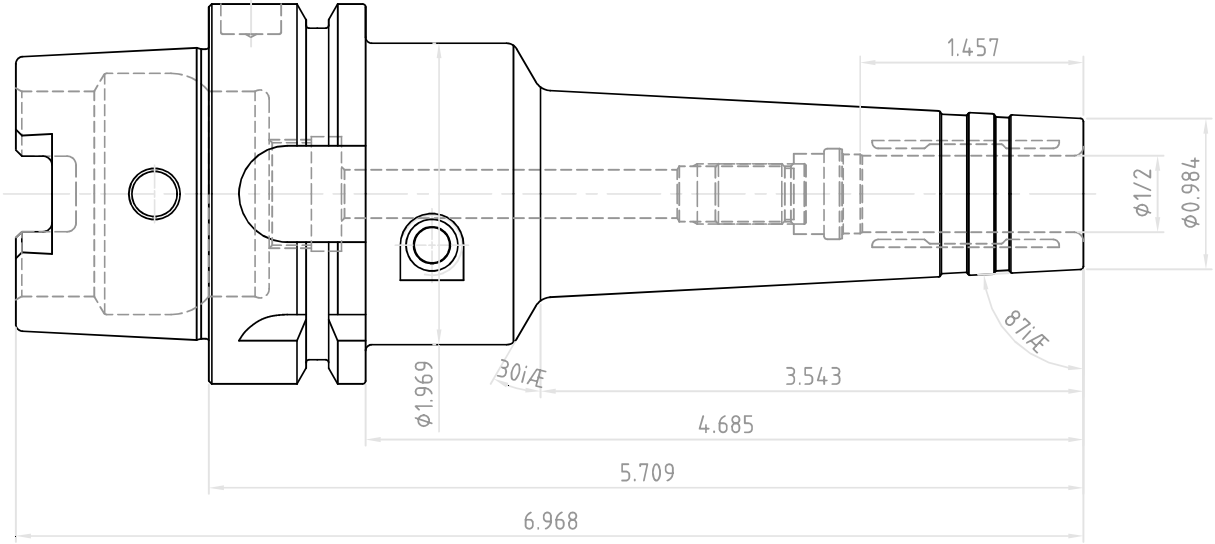

	DESCRIPTION		
YG-1 CO., LTD.	HSK63A-HMC1/2(12.7)-5.71(145)		
	EDP No.	WQ026HMC	SCALE 1 : 1