NO.	REVISIONS	DATE	DEVISER
1.			
2.			
3.			

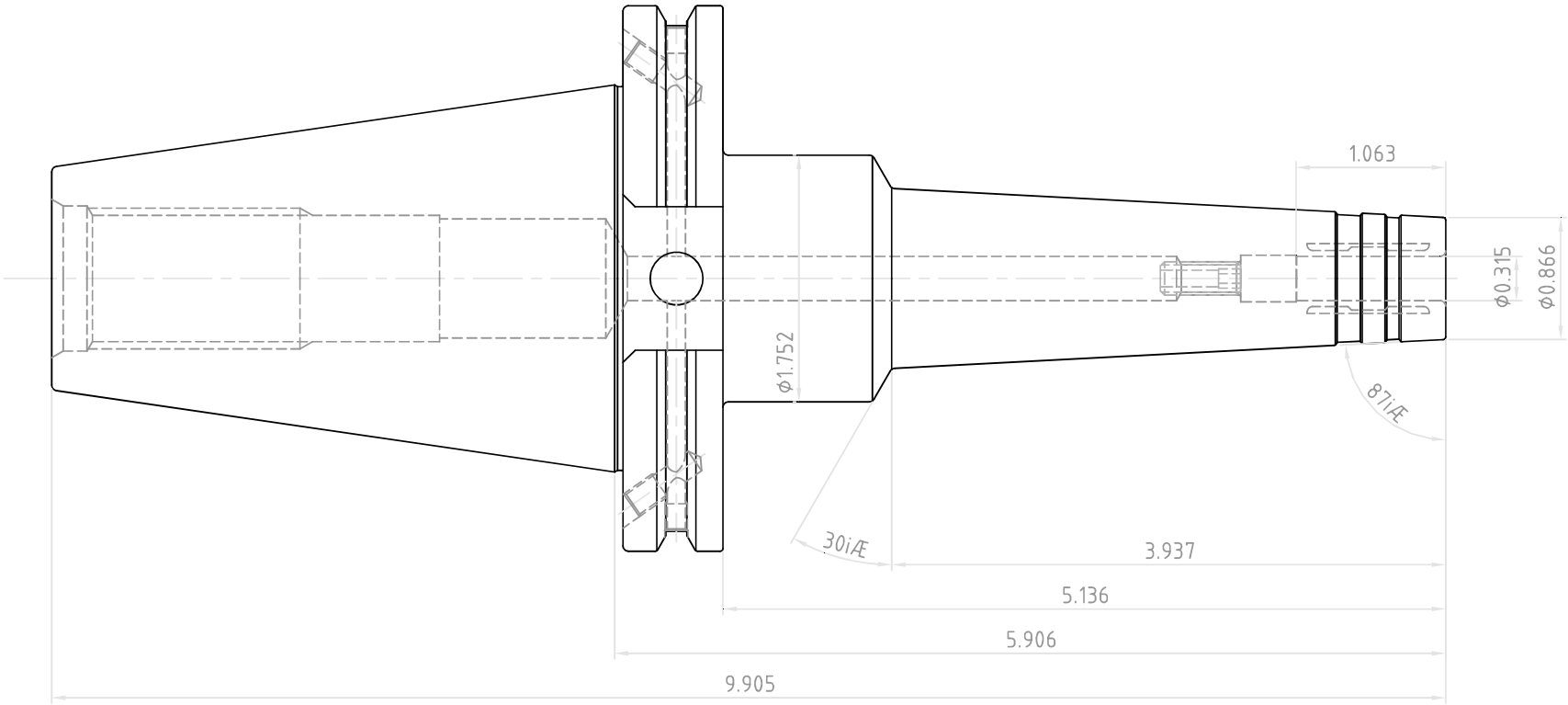

	DESCRIPTION		
YG-1 CO., LTD.	CCT50AD/B-HMC0.31(8)-5.91(150)		
	EDP No.	WC102HMC	SCALE 1 : 1