NO.	REVISIONS	DATE	DEVISER
1.			
2.			
3.			

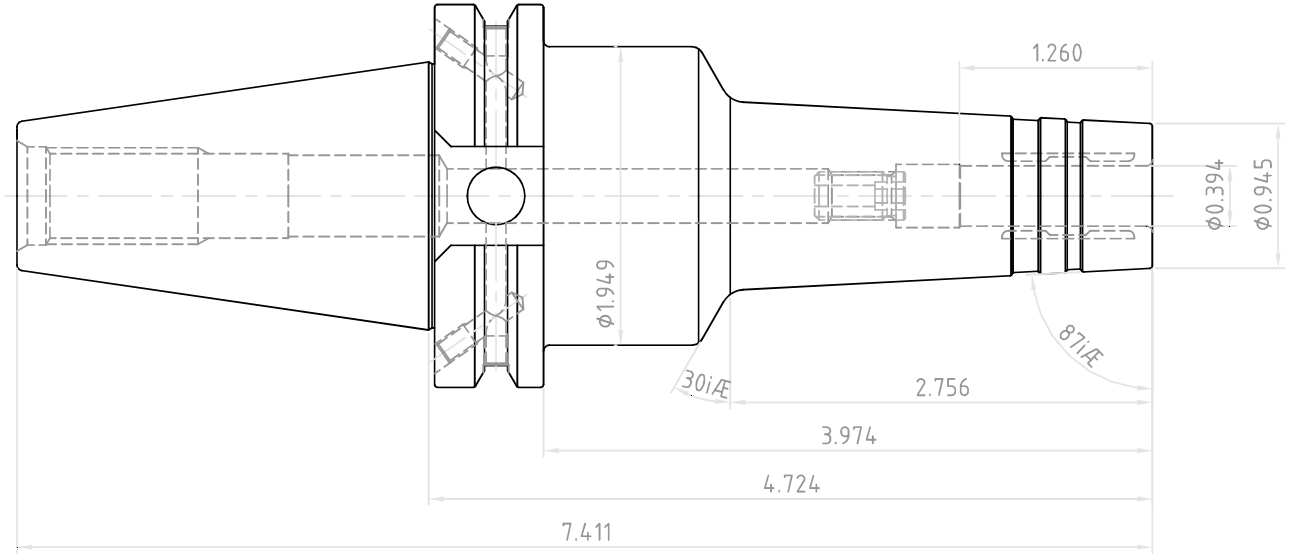

	DESCRIPTION			
YG-1 CO., LTD.	CCT40AD/B-HMC0.39(10)-4.72(120)			
	EDP No.	WB108HMC	SCALE	1 : 1