NO.	REVISIONS	DATE	DEVISER
1.			
2.			
3.			

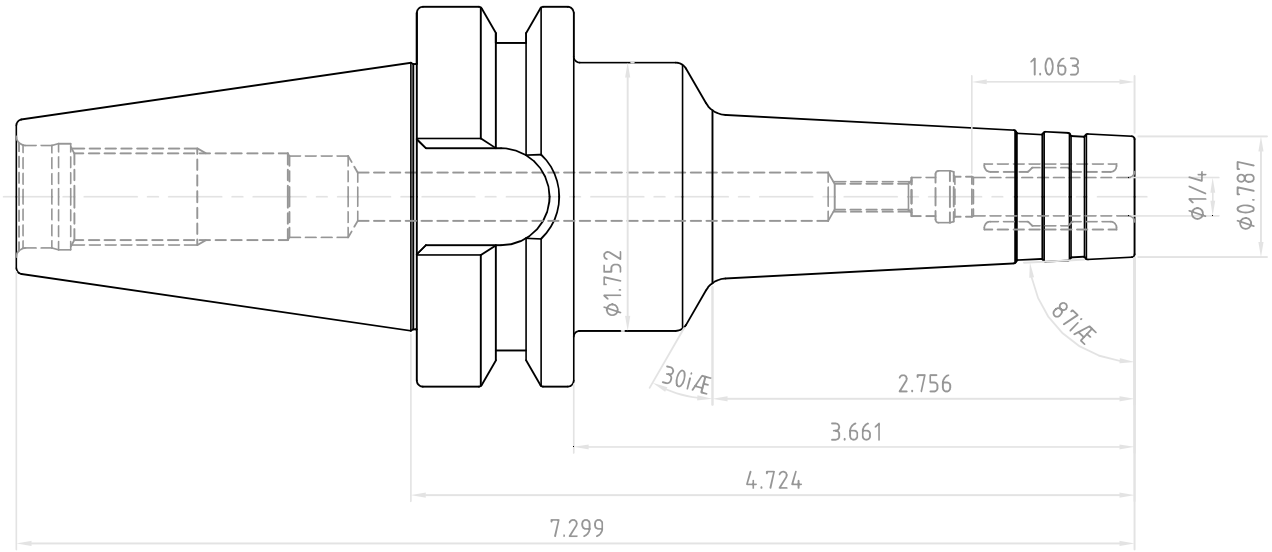

	DESCRIPTION		
YG-1 CO., LTD.	CBT40-HMC1/4(6.35)-4.72(120)		
	EDP No.	WE020HMC	SCALE 1 : 1